(TOOM) 15/03/24 M/S

USN | | | | | | | | | | |

[23TCSE209]

SECOND SEMESTER B.Tech EXAMINATION, MARCH-2024

ELECTRICAL AND ELECTRONICS FOR COMPUTATIONAL THINKING

Time: 3 Hours **Maximum Marks: 100**

Instructions: i. Missing data may be suitably assumed.

ANSWER ALL QUESTIONS

PART-A 5 X 2=10

1.	a.	Define Ohm's law with example.	L1	CO1	02
	b.	Draw the phasor diagram for series RL circuit.	L1	CO2	02
	c.	Define energy and power signals with equations.	L1	CO3	02
	d.	What is pre-processing?	L2	CO4	02
	e.	What are the elements of visual perception?	L2	CO5	02
		PART-B		6 X 5=30	
2.	a.	Calculate the equivalent resistance and total current for the circuit which is connected to 120 V battery and also find the potential difference across $R_1=11\Omega$, $R_2=7\Omega$ and $R_3=20\Omega$ resistors in the circuit. 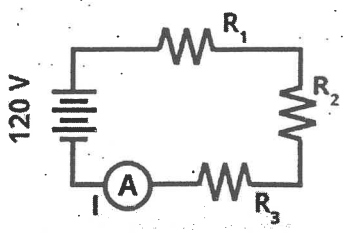	L3	CO1	05
		OR			
	b.	Distinguish between active and passive elements in electrical circuits.	L2	CO1	05
3.	a.	Define Root Mean Square of current and voltage.	L1	CO2	05
		OR			
	b.	Describe voltage, current, and power in an series RLC circuit, and provide their mathematical representations.	L2	CO2	05
4.	a.	Demonstrate the working of an image processing system and discuss the role of each component in detail.	L3	CO5	05
		OR			
	b.	Define digital image processing. Mention its applications.	L2	CO5	05
5.	a.	Explain the fundamental concepts of control systems.	L2	CO6	05
		OR			

	b.	Analyse the closed-loop and open-loop control systems with suitable example.	L4	CO6	**05**
6.	**a.**	Outline the main steps involved in the data cleaning process.	L2	CO4	**05**
		OR			
	b.	Explain the concept of grouping in signal processing.	L2	CO4	**05**
7.	**a.**	Check whether the following signal is periodic or aperiodic X(t)=sin 6πt and x(n)=u(n)	L4	CO3	**05**
		OR			
	b.	Differentiate between continuous-time and discrete-time signals.	L4	CO3	**05**
		PART – C		**6 X 10=60**	
8.	**a.**	Explain Kirchhoff's Current and Voltage law with suitable examples.	L2	CO1	**10**
		OR			
	b.	The value of each resistor is 4Ω then calculate the equivalent resistance across the terminals **a** and **b**. 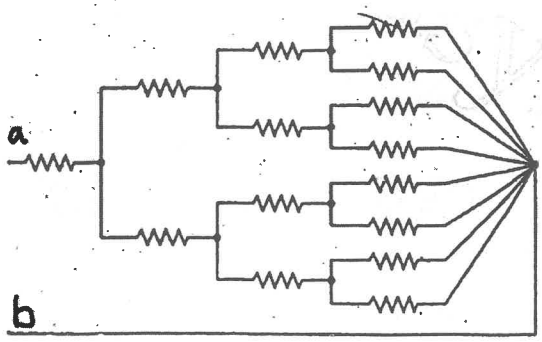 	L3	CO1	**10**
9.	**a.**	Define Real, Reactive and Apparent Power with the help of power triangle in AC Circuits. Also, derive power factor with the help of power triangle.	L2	CO2	**10**
		OR			
	b.	Derive the expression for voltage, current, and power for a single-phase AC circuit containing R-L connected in series. Draw the necessary waveform and phasor diagram.	L2	CO2	**10**
10.	**a.**	Check whether the following signals are even or odd signal and energy or power signal i)X(t)=4cos 8πt ii) x(n)= 8 sin 2πt	L4	CO3	**10**
		OR			
	b.	Illustrate the various types of signals.	L2	CO3	**10**

11.	**a.**	Interpret the process of designing a control system. What are the key steps involved?	L3	CO6	**10**
		OR			
	b.	Explain the basic components and function of a control system.	L2	CO6	**10**
12.	**a.**	Demonstrate the fundamental steps in digital image processing.	L3	CO5	**10**
		OR			
	b.	Elaborate in detail on the elements of visual perception.	L4	CO5	**10**
13.	**a.**	Demonstrate the needs for pre-processing and types of pre-processing.	L3	CO4	**10**
	b.	Describe in detail about smoothing in processing of signals. Discuss two commonly used smoothing techniques.	L2	CO4	**10**